MICRO SWITCH
FREEPORT, ILLINOIS, U.S.A.
A DIVISION OF HONEYWELL
FED. MFG. CODE 91929

PACKET

CATALOG LISTING
12 PA 6

THIS DRAWING COVERS A PROPRIETARY ITEM AND IS THE PROPERTY OF MICRO SWITCH, A DIVISION OF HONEYWELL. THIS DRAWING IS NOT TO BE COPIED OR USED WITHOUT THE APPROVAL OF MICRO SWITCH.

12 PA 6

M

DRAWING NUMBER

ISSUE 5

REPLACES

RELEASE NO. PR-10302

CHECK 28 JAN 81

CHECK KJC

CHECK 28 JAN 81

CHECK KLH

CHECK 28 JAN 81

DRAWN SLB 28 JAN 81

REVISIONS

A	DR-2423	SLB 28 JAN 81
B	PR-10302	JAP 10 JUN 81
C	C056164	JAP 6 MAR 85
D	C059134	KEW 15 APR 86

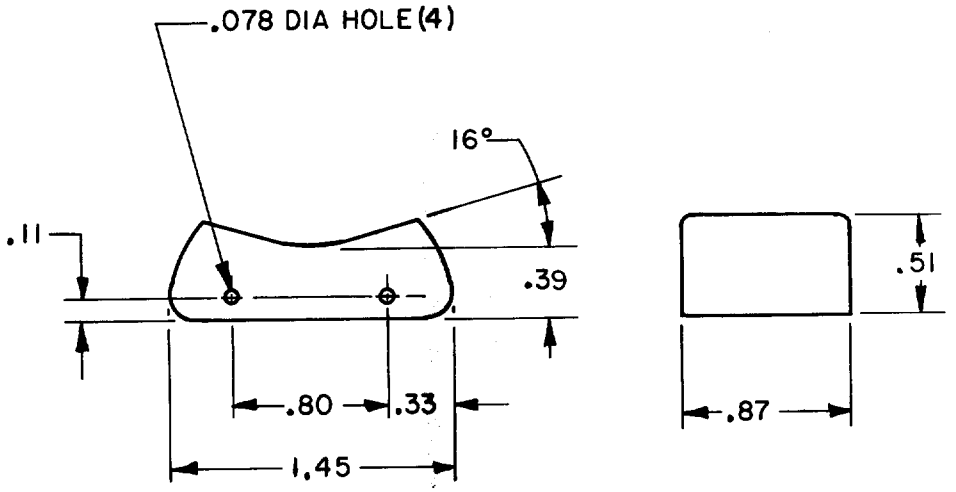

NOTE
1 MATERIAL - TRANSLUCENT WHITE ACRYLIC

THIRD ANGLE PROJECTION

SCALE FULL

DO NOT SCALE PRINT

TOLERANCES
APPLY TO DESIGN UNITS. CONVERSIONS ARE ONLY FOR REFERENCE. UNLESS NOTED, TOLERANCES ARE ±

	DIM. mm	TOL. mm/in	DIM. in	TOL. mm/in
NO PLACES	X	1/.04		
ONE PLACE	X.X	0.4/.016	X.X	0.8/.03
TWO PLACES	X.XX	0.15/.006	X.XX	0.38/.015
THREE PLACES			X.XXX	0.13/.005
ANGLES				

SI METRIC ☐ US CUSTOMARY ■

DESIGN UNITS

WEIGHT